Brand :	HANSGROHE, Germany
Name :	PURA VIDA single lever bidet mixer with pop-up waste set
Item Code :	15270.400
Designer :	Phoenix Design
Color / Finish :	Chrome
Dimensions :	Overall (LxWxH in cm)

Product info:

- consists of: single lever bidet mixer, pop-up waste set (metal)
- projection 106 mm
- Ball-pivot joint
- laminar spray
- flow rate at 3 bar: 7,2 l/min
- joystick ceramic cartridge
- suitable for continuous flow water heaters

Add-ons

- 2 x Angle valve $^{1}/_{2}$ x $^{3}/_{8}$ with conical nut
- 1 x Bidet P-trap

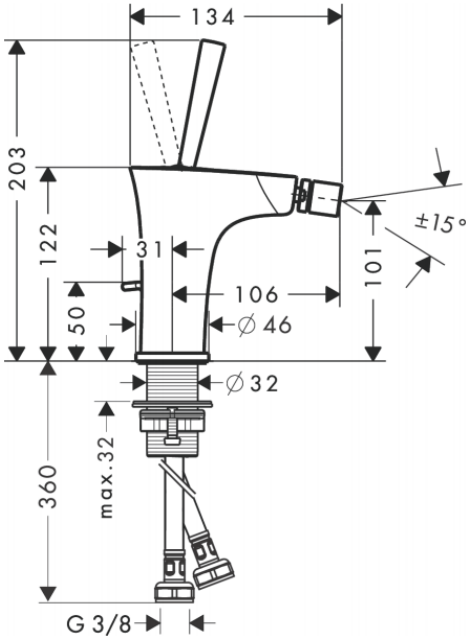

Flowchart

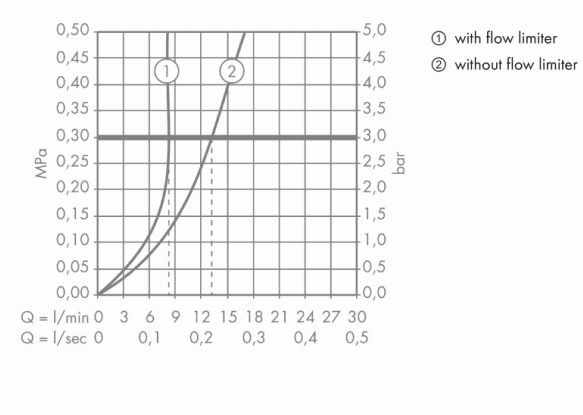

Flushing of pipe must be done before fittings are installed. Failure to do so voids the warranty.
Follow cleaning instructions and avoid using any harmful chemicals.
All information is for reference only. Installation shall always be based on the specs provided with actual delivered items.
For more info, visit **www.kuysen.com**