Brand :	HANSGROHE, Germany
Name :	Raindance Select E Overhead Shower 360 2jet
Item Code :	27385.000
Designer :	Hansgrohe
Color / Finish :	Chrome
Dimensions :	

Product info

- Consists of: overhead shower, shower arm
- Shower head size: 300 x 160 mm
- Spray type: Rain, RainAir
- Shower arm length: 390 mm
- Ball-joint: overhead shower angle adjustable
- Flow rate Rain spray (at 3 bar): 15 l/min
- Flow rate RainAir spray (at 3 bar): 14 l/min
- Select button on overhead shower
- Spray disc surface: chrome
- Material spray disc: metal
- Spray disc removable for cleaning

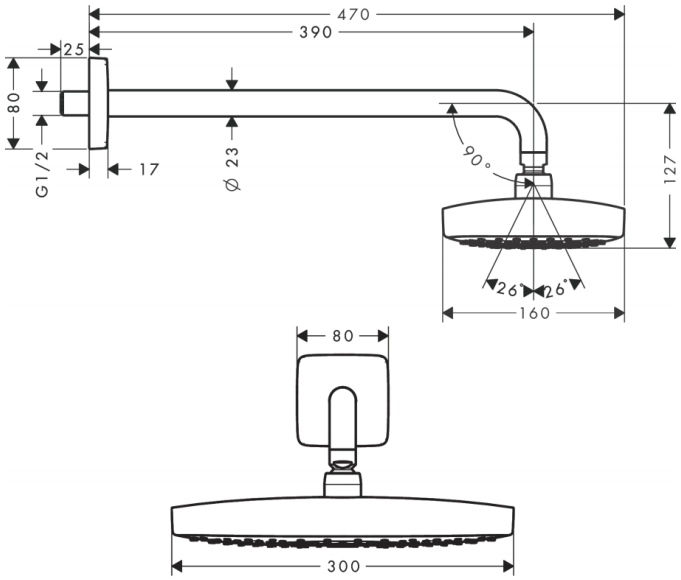

Technology

Flowchart

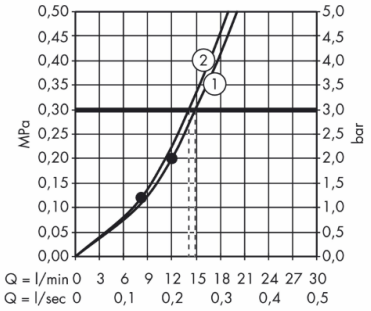

The consumption was measured in combination with the appropriate fittings (thermostat/mixer/ in-wall valve) to reflect actual application in practice.

Flushing of pipe must be done before fittings are installed. Failure to do so voids the warranty.
Follow cleaning instructions and avoid using any harmful chemicals.
All information is for reference only. Installation shall always be based on the specs provided with actual delivered items.
For more info, visit **www.kuysen.com**