Brand :	HANSGROHE, Germany
Name :	METROPOL CLASSIC 3-hole basin mixer 160 with lever handles and pop-up waste set
Item Code :	31331.090
Designer :	Hansgrohe
Color / Finish :	Chrome/Gold
Dimensions :	Overall (LxWxH in cm)

Product info:

- consists of 3-hole basin mixer, push-open waste set (metal)
- ComfortZone 160
- projection 147 mm
- ceramic valves hot/ cold 90°
- flow rate at 3 bar: 5 l/min
- temperature limitation adjustable
- suitable for continuous flow water heaters

Add-ons

- 2 x Angle valve $^{1}/_{2}$ x $^{3}/_{8}$ with conical nut
- 1 x P-trap

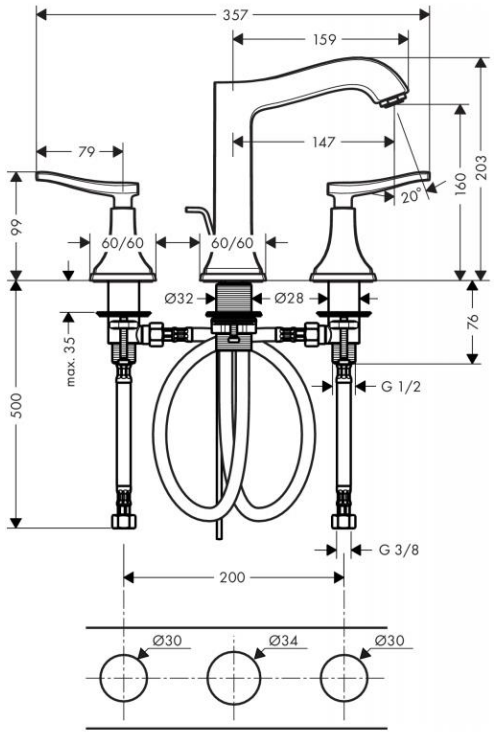

Technology

Flowchart

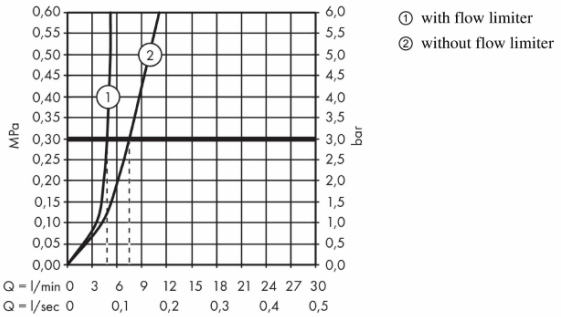

Flushing of pipe must be done before fittings are installed. Failure to do so voids the warranty.
Follow cleaning instructions and avoid using any harmful chemicals.
All information is for reference only. Installation shall always be based on the specs provided with actual delivered items.
For more info, visit **www.kuysen.com**