KUYSEN ENTERPRISES, INC

AXOR

Brand :	Axor, Germany
Name :	Edge 3-hole Basin Mixer 130 Diamond Cut
Item Code :	46051.000
Designer :	Jean-Marie Massaud
Color / Finish :	Chrome
Dimensions :	

Product info:

- consists of: 3-hole basin mixer, push-open waste set (metal)
- Comfort Zone 130
- projection 173 mm
- normal spray
- flow rate at 3 bar: 5 l/min
- ceramic valves hot/ cold 90°
- suitable for continuous flow water heaters

Add-ons :

- 2 x angle valve 1/2 x 3/8 w/ conical nut
- 1 x p-trap

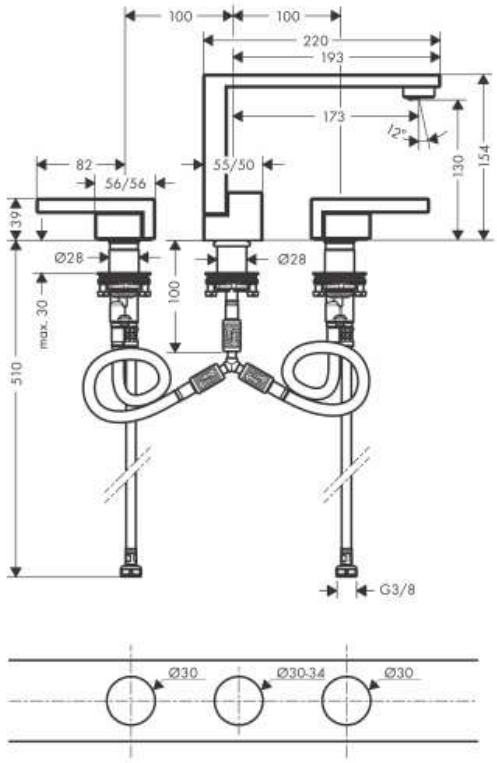

Technology

Flowchart

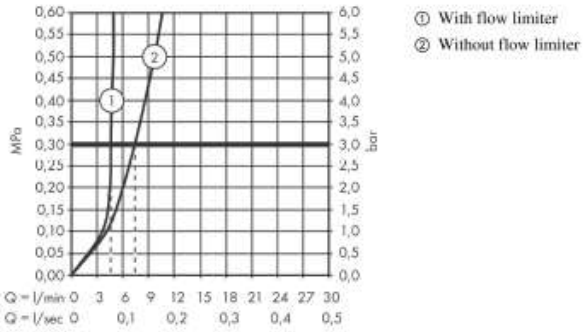

Flushing of pipe must be done before fittings are installed. Failure to do so voids the warranty.
Follow cleaning instructions and avoid using any harmful chemicals.
All information is for reference only. Installation shall always be based on the specs provided with actual delivered items.
For more info, visit **www.kuysen.com**