KUYSEN ENTERPRISES, INC.

hansgrohe

| | |
|---|---|
| Brand : | HANSGROHE, Germany |
| Name : | TALIS E 3 Hole Basin Mixer w/ Pop-up Waste |
| Item Code : | 71733.670 |
| Designer : | Hansgrohe |
| Color / Finish : | Matt Black |
| Dimensions : | |

Product info

- Consists of: 3-hole basin mixer, waste set
- ComfortZone 150
- Projection 112 mm
- Ceramic valves hot/ cold 90°
- Flow rate at 3 bar: 5 l/min
- Ceramic cartridge
- Temperature limitation adjustable
- Suitable for continuous flow water heaters
- Pop-up waste set G 1¼
- Material waste set: metal
- Surface of the pull rod -670 matt black

Add-on

- 2 x Angle valve $^{1}/_{2}$ x $^{3}/_{8}$ with conical nut
- 1 x P-trap

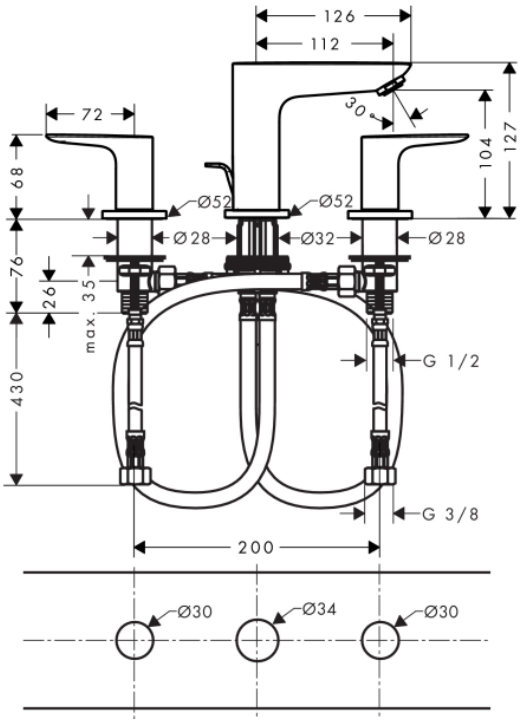


## Technology

## Flowchart

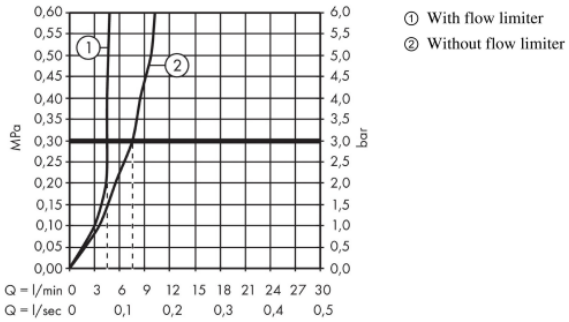


Flushing of pipe must be done before fittings are installed. Failure to do so voids the warranty.
Follow cleaning instructions and avoid using any harmful chemicals.
All information is for reference only. Installation shall always be based on the specs provided with actual delivered items.
For more info, visit **www.kuysen.com**