Brand :	GEESA, Netherlands
Name :	TONE Towel Rail 60cm
Item Code :	7307-0260
Designer :	Geesa
Color / Finish :	Chrome
Dimensions :	Overall (LxWxH in cm) 64.9 x 7.1 x 4.9cm

Product info:

- Material: Metal

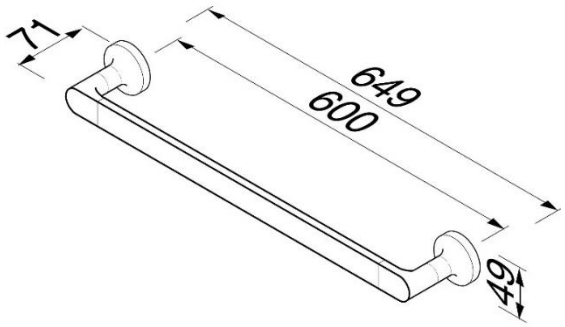

Design awards

DESIGN AWARD 2015

Flushing of pipe must be done before fittings are installed. Failure to do so voids the warranty.
Follow cleaning instructions and avoid using any harmful chemicals.
All information is for reference only. Installation shall always be based on the specs provided with actual delivered items.
For more info, visit **www.kuysen.com**