KUYSEN ENTERPRISES, INC.

hansgrohe

Brand :	Hansgrohe, Germany
Name :	New Metric 3-hole 2-handle basin mixer
Item Code :	31083.000
Color/Finish :	Chrome
Dimensions:	153 mm L x 128 mm H 116 mm spout projection

Product info:

- 3-hole 2-handle basin mixer
- With basin pop-up waste 1¼“
- ComfortZone 100
- Flow rate: 5 l./min. at 3 bar
- Flow pressure; 1~5 bar (15~70 psi)

Add-ons:

- 2x angle valve ½"x⅜“
- 2x angle valve ½"x⅜"

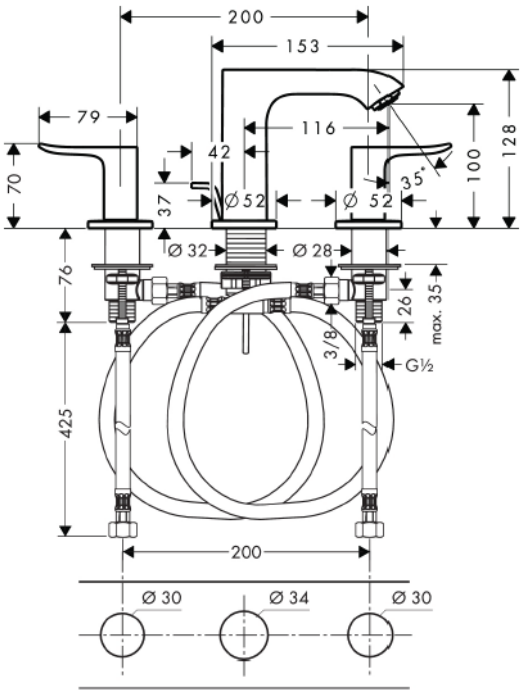

Flushing of pipe must be done before fittings are installed. Failure to do so voids the warranty.
Follow cleaning instructions and avoid using any harmful chemicals.
All information is for reference only. Installation shall always be based on the specs provided with actual delivered items.
For more info, visit **www.kuysen.com**